DESIGNED TO DISAPPEAR

Tracktrim®by LINO isa perfect fit solution to recess manual and electric curtain tracks. The track and end set are installed flush with the ceiling during construction to form a cavity matching the drapery system and can be painted to match the ceiling. Standard curved sections are available to fit corners, curved walls, bay windows and other applications. When curtain tracks are installed, the result is a minimalist design where curtain tracks fully blend in, flush with the ceiling.

TRACKTRIM

Superior recessed curtain track system.

TRACKTRIM – Sample Configuration

ITEMS USED:

- TT1F
- TTL1

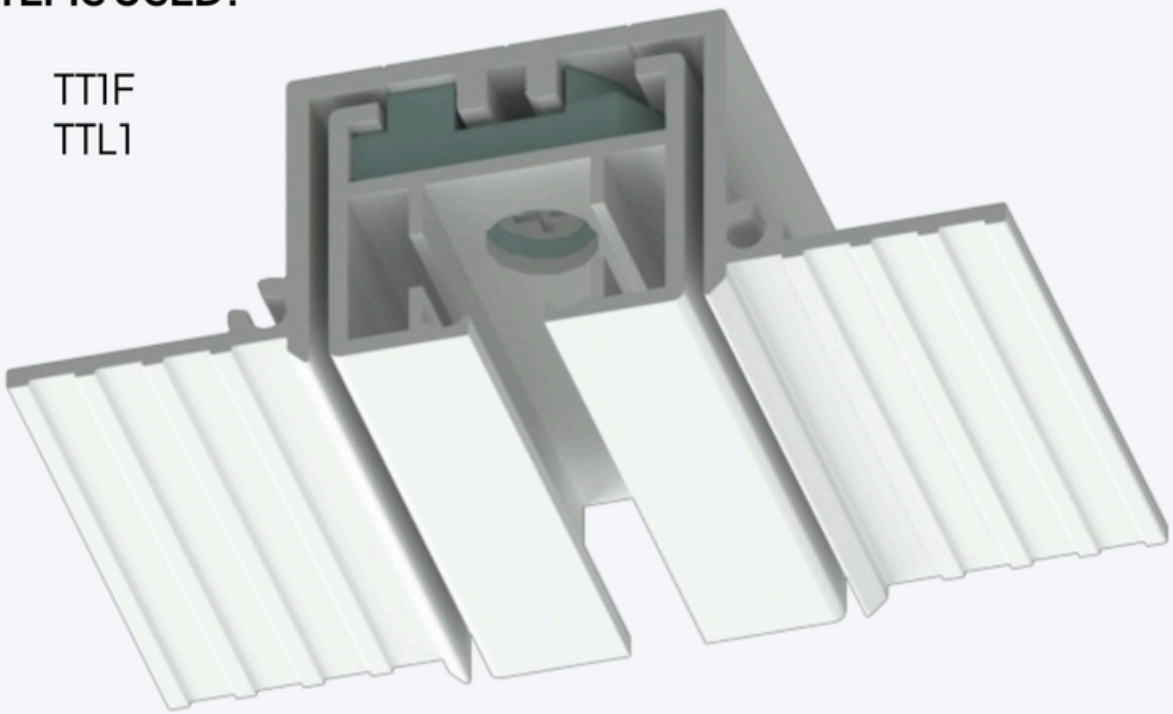

TRACKTRIM – Tracks & Flat Ends

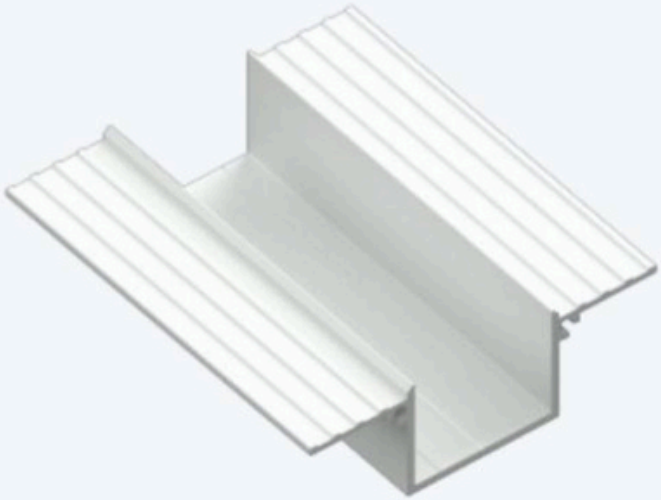

TT2F-2m

ARTICLE: 71003-2

PRODUCT INFO:
Tracktrim Track without Screw Channel 2m

standard S SERIES

The standard for hiding roller blinds.

standard S SERIES

Lino's Series is a concealment box made to hide roller blinds with minimal visual impact. The box is installed during construction with the space accessible for blinds installation when the room is completed. It features the patented Lino Safety Hinge that secures the cover in place and can be installed in any direction, allowing for side boxes to hide blind side channels or guide wires. Popular in floor-to-ceiling windows and sliding doors, S Series can be installed to future-proof buildings to have the option for later installation of concealed blind

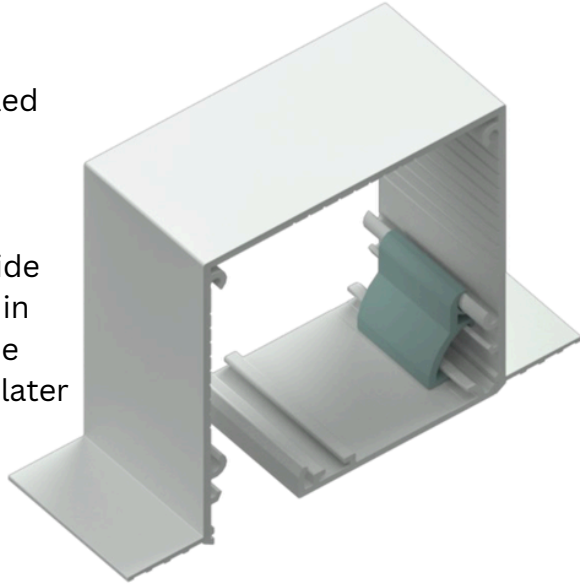

S100x100 Headbox

Blinds up to ~2400 wide*

* Blind sizes depend on blind products used, boxes provided up to 6000 wide.

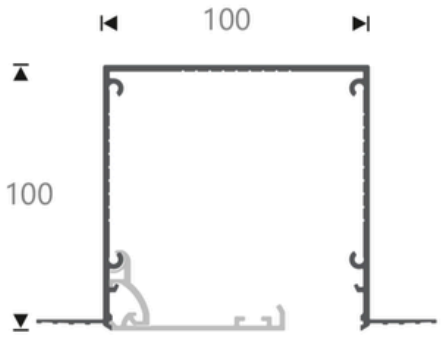

S SERIES – Head and Side Boxes

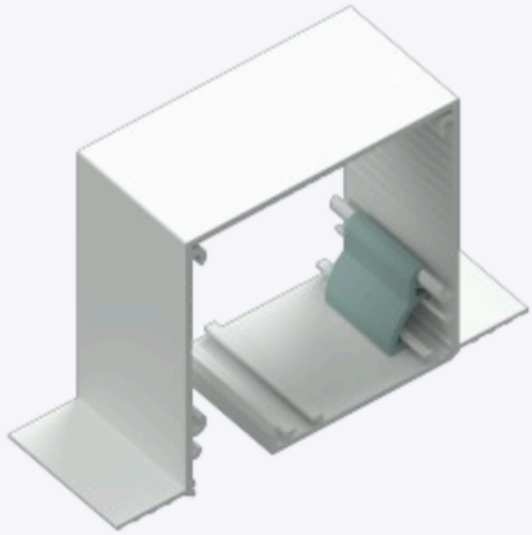

S100x100SS

ARTICLE: 56002

PRODUCT INFO:
Head Box, two flanges,
Cover+Hinges 6m

S SERIES – Cover Plates & Hinges

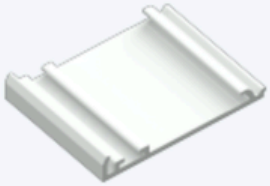

C65

ARTICLE: 86014

PRODUCT INFO:
Cover 65mm 6m

MWB
ARTICLE: 60107

PRODUCT INFO:
Modular Wall Bracket

S SERIES – Cover Plates & Hinges

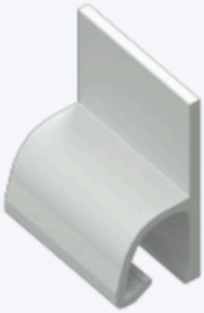

MWH
ARTICLE: 60114

PRODUCT INFO:
Modular Wall Hinge for installation without Head Box

S SERIES – End Caps, Chain Guides & Wall Mount

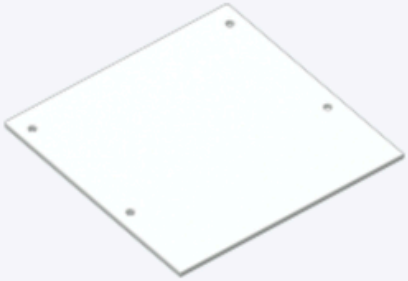

MEC100x100
ARTICLE: 63101

PRODUCT INFO:
End Cap for M100x100